AD-A103 664 UNIVERSITY OF MANCHESTER INST OF SCIENCE AND TECHNOLO--ETC F/G 4/2
FIELD MEASUREMENT OF RAINDROP SIZE SPECTRA.(U)
JUN 81 A J ILLINGWORTH
UNCLASSIFIED DAJA37-80-C-0229
NL

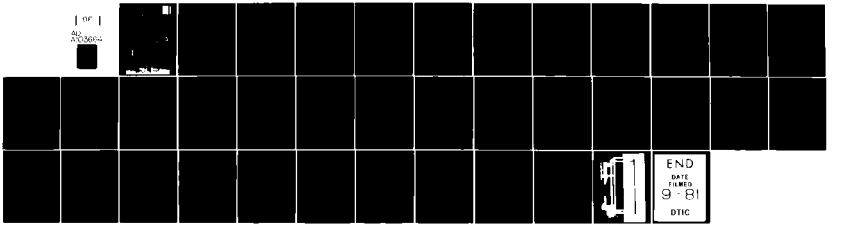

The University of Manchester Institute of Science and Technology

PO BOX No 88 · SACKVILLE STREET · MANCHESTER M60 1QD
TELEPHONE 061-236 3311

LEVEL II

5

AD A103664

DTIC FILE COPY

DTIC
SEP 2 1981
H

DISTRIBUTION STATEMENT A
Approved for public release;
Distribution Unlimited

(5)

FIELD MEASUREMENT OF RAINDROP SIZE SPECTRA

Contract No DAJA 37-80-C-0229

DTIC
SEP 2 1981
H

Final Report

June 1981

Dr. A.J. Illingworth,
Physics Department,
UMIST,
Manchester M60 1QD,
England.

DISTRIBUTION STATEMENT A
Approved for public release;
Distribution Unlimited

A.J. Illingworth
Principal Investigator

81 9 01 134

UNCLASSIFIED

SECURITY CLASSIFICATION OF THIS PAGE (When Data Entered)

R&D 2877-EN

REPORT DOCUMENTATION PAGE

READ INSTRUCTIONS BEFORE COMPLETING FORM

1. REPORT NUMBER	2. GOVT ACCESSION NO. AD-A103 664
3. RECIPIENT'S CATALOG NUMBER	
4. TITLE (and Subtitle) Field Measurement of Raindrop Size Spectra	5. TYPE OF REPORT & PERIOD COVERED Final Report. May 1980—Jun 1981
	6. PERFORMING ORG. REPORT NUMBER
7. AUTHOR(s) Dr. A. J. Illingworth	8. CONTRACT OR GRANT NUMBER(s) DAJA37-80-C-0229
9. PERFORMING ORGANIZATION NAME AND ADDRESS Department of Physics Univ. of Manchester Institute of Science & Technology, Manchester M60 1QD, England	10. PROGRAM ELEMENT, PROJECT, TASK AREA & WORK UNIT NUMBERS 1T161102BH57-01
11. CONTROLLING OFFICE NAME AND ADDRESS USARDSG-UK Box 65 FPO New York, NY 09510	12. REPORT DATE June 1981
	13. NUMBER OF PAGES 38
14. MONITORING AGENCY NAME & ADDRESS (if different from Controlling Office)	15. SECURITY CLASS. (of this report) Unclassified
	15a. DECLASSIFICATION/DOWNGRADING SCHEDULE

16. DISTRIBUTION STATEMENT (of this Report)

Approved for public release, Distribution unlimited

17. DISTRIBUTION STATEMENT (of the abstract entered in Block 20, if different from Report)

18. SUPPLEMENTARY NOTES

19. KEY WORDS (Continue on reverse side if necessary and identify by block number)

Raindrop Size Measurement

20. ABSTRACT (Continue on reverse side if necessary and identify by block number)

A new instrument for measuring the concentration and size of raindrops at the ground is described. This instrument measures the time of flight of drops across a sample volume and thus does not require a measured or assumed drop velocity as do existing disdrometers. The signals expected from the device are analysed and a detailed description of the electronics complete with circuits diagrams is given. This is followed by the Z80 machine code routing for measuring the time of flight and size of the droplets in real

over

DD FORM 1 JAN 73 1473 EDITION OF 1 NOV 65 IS OBSOLETE

UNCLASSIFIED

SECURITY CLASSIFICATION OF THIS PAGE (When Data Entered)

406 52

time as they cross the sample volume, together with the high level program for subsequently sorting this data and printing the spectra. The procedure for setting up and calibrating the instrument is outlined and some sample results obtained in the field are presented. These results show that the device is working satisfactorily. Finally some suggestions for future work are given.

Accession For
NTIS GRA&I
DTIC TAB
Unannounced
Justification
By
Distribution/
Availability
Dist
A

CONTENTS

1) Instrument Summary

2) Comparison with existing commercial instruments

3) The UMIST Disdrometer

4) Photodiode Pulse Characteristics

5) Electronic and Circuit Diagrams

6) Software for Z80 based microcomputer

7) Setting up, Calibration and Results

8) Future Work

APPENDIX: Engineering Drawings

ABSTRACT

A new instrument for measuring the concentration and size of raindrops at the ground is described. This instrument measures the time of flight of drops across a sample volume and thus does not require a measured or assumed drop velocity as do existing disdrometers. The signals expected from the device are analysed and a detailed description of the electronics complete with circuit diagrams is given. This is followed by the Z80 machine code routine for measuring the time of flight and size of the droplets in real time as they cross the sample volume, together with the high level program for subsequently sorting this data and printing the spectra. The procedure for setting up and calibrating the instrument is outlined and some sample results obtained in the field are presented. These results show that the device is working satisfactorily. Finally some suggestions for future work are given.

1. Instrument Summary

The distrometer detects raindrops as they enter and leave a cylindrical sample volume. The sample volume is defined by a sheath of light 100 μm thick which surrounds the cylinder. This light is collected on to a photodiode as shown in Figure 1. A drop entering and leaving the volume will give rise to two pulses from the photodiode amplifier output having height proportional to the drop size and separation in time equal to the drop transit time. As shown in Figure 1 single pulses which result from a drop passing through the edge of the annular beam are rejected from the subsequent computer analysis and only pairs of pulses are accepted. Thus for each pulse pair we have the amplitude which gives the diameter (d) of the drop and the transit time (t).

a) Flux method

The first and more conventional analysis technique is to calculate the flux of drops and then from an assumed velocity to find the concentration. If the projected sample area of the volume is A, and in a time T, there are n pulses pairs corresponding to drops of diameter size d, then the flux of these drops is $n/A.T.$ and if the drop velocity is v then the concentration is

$$n/(v.A.T.).$$

b) Time of flight method

The seond method uses the time of flight information. If in a time T, for drops of size d, the total time of flight of all the drops is Σt, we know that drops of this size were in the sample volume, V, a fraction $\Sigma t/T$ of the time, and thus the concentration is given as directly as $VT/\Sigma t$ drops per unit volume. No knowledge or assumption of the drop velocity is needed, and the instrument can operate in conditions of high windspeed.

2. Comparison with existing commercial instruments

The two commercial instruments available both measure the flux of raindrops and assume terminal velocities to derive a drop concentration. As shown below both suffer from some shortcomings in windy weather. The new instrument described in this report is also of much simpler construction and does not suffer from any critical optical alignment problems.

a) Joss-Waldvogel Distrometer (1967)

This device measures the momentum of drops as they impact upon a 50cm^2 horizontal plate. Earlier examples of this type had an unacceptable dead time during which the oscillations excited by each impact died away. In this device, however, a complex servo-system keeps the plate stationary. The minimum size detectable is generally 300μm but this may not be attained during acoustic interference from strong wind or thunderstorms. As the sampling head is in the form of a toadstool, in windy weather when the drops are not falling vertically the sample area will change in an unpredictable manner.

b) The Knollenberg Optical Array Distrometer (1970, 1972)

The PMS ground-based optical array precipitation spectra probe is designed to measure drops over the size range 0.2 to 12.4mm with a sample area up to 60cm^2. This instrument measures the shadows cast by raindrops on a linear photodiode array.

It has been developed from an aircraft mounted instrument in which case the terminal velocities are negligible compared with the aircraft velocity. The performance of the instrument is described by Heymsfield (1976) and Curry and Schemenauer (1979). White Sands scientists have experienced difficulties in obtaining reliable drop concentrations, derived from the drop flux measurements of the ground-based instrument, during windy weather.

3. The UMIST Disdrometer

The present prototype device operates on the shadowgraph principle, but, whereas the PMS (Knollenberg, 1972) device has a horizontal rectangular sample area, this instrument detects drops as they enter and leave a cylindrical volume. This cylindrical volume presents an equal area to any drops which, due to high winds, are not falling vertically.

Figure 1 shows the optical arrangement. The device is very simple so that operation in hazardous field environments will be reliable. The use of coherent radiation has been avoided because of interference problems arising from dust particles and the expensive optical elements which would be required. None of the lenses need to be very precisely positioned thus no accurate adjustments are required in the field.

A quarz-halogen filament light source of diameter 0.5mm at the focus of a lens of focal length 25cm provides a parallel beam of light. After this light has crossed the sample volume (in this example a distance of 17cm) it is normally incident upon a mask which only transmits light falling upon an annulus of diameter 3 cm and width 100μm, thus defining the boundary of the sample volume. The light passing through the annulus is then focused on a large area photodiode. When a drop enters and leaves the volume it should give rise to two equally sized pulses from the photodiode amplifier as it obscures first one side of the annulus and then the other. Provided that the drop is larger than 100μm diameter the amplitude of the pulses should be proportional to the drop diameter. Single pulses resulting from drops passing through the edge of the annulus are rejected in subsequent computer analysis. This rejection criterion is much simpler than the linear array of photodiodes required for the PMS instrument.

a) Diffraction limits and sampling volume

Knollenberg (1970) shows that a raindrop acts as an opaque sphere and refraction can be neglected but the smallest detectable drop size is limited by diffraction. It can be seen from Knollenberg's isodensitometer traces of diffraction patterns of particles in white light that, at a distance equal to

$\frac{3d^2}{4\lambda}$ (where d is diameter and λ the wavelength of light) the total intensity of light measured along a narrow slice through the diffraction pattern has fallen to 75% of its value for a perfect geometric shadow. For a sampling cylinder of length 17cm this corresponds to a particle of diameter 300μm being measured to an accuracy of 100μm. Laboratory calibration of the disdrometer with artificially produced drops confirmed this limit.

The 17cm sample length, giving a sample area of $51cm^2$, was chosen as a compromise so that a reasonable number of large drops would be sampled without having too high a minimum detectable drop size. If it were considered important to build up a statistically significant number of both very small and very large drops in the minimum time then two instruments with differing lengths of sampling cylinder could be operated simultaneously. The disdrometer is constructed so that this is a trivial mechanical adjustment.

b) Setting up procedure and tolerances

The apparatus has been designed to be rugged and simple, with no precise adjustments required in order to facilitate field operation. The 0.5mm diameter light source placed at the focus of a 5cm diameter, 25cm focal length lens results in a beam divergence of 1 in 500. In order not to exceed this divergence, due to the finite source, the source must be placed so that it is within 2mm both axially and radially of the lens' focus. Over 17cm the 1 in 500 divergence will introduce a maximum penumbra of 340μm, however, because the annulus defines a slice through the shadow and penumbra the error introduced is much less than this.

A large area photodiode (3mm x 3mm) is used so that the 10cm lens, collecting light from the annulus, needs to be placed to within 3mm of the axis and along the axis to within 1cm of the focal point.

The only precision required lies with the annulus. Is is most important that the width be 100μm ($\pm$ 1 %) and that the transmission around the annulus be uniform to 1%.

c) Engineering Drawing

In the appendix is a full drawing of the optical arrangement of the distrometer. The light source is a 6V 10W miniature quartz-halogen light source type M29 manufactured by Thorn Lighting, U.K. The source is mounted so that the filament coil axis is along the axis of the instrument to keep the source diameter a minimum.

4. Photodiode Pulse Characteristics

Before describing the electronic design and circuitry in detail it is important to calculate the various characteristics of the pulse expected from the photodiode current to voltage

(a) Individual pulse risetimes

The smallest drop detectable is limited by diffraction to 300μm diameter and thus a pulse length of 10μsec would correspond to a drop of the size crossing the 100μm wide beam at 30m sec^{-1}. Larger drops or lesser winds will result in longer pulses. The longest pulses will be caused by the largest drops falling at terminal velocity. For a 4mm drop at 8m sec^{-1} the pulse length will be 500μsecs. The electronics should be able to cope with pulse lengths of 10-500μsecs or rise times of half that time.

(b) Pulse pair separation

The possible range of separation of the pulse pairs is summarised in Table 1. The drops may either fall at terminal velocity or at the speed of the wind (a maximum value of 30ms^{-1} being assumed), and they may cross a diameter (30mm) or near the edge of the beam. If the drop passes through the edge of the beam there will of course be only a single pulse. Assuming that the two pulses will be just resolvable if the light intensity returns to normal between the pulses we can use the intersecting chords theorum as shown in Figure 2 to calculate the minimum resolvable transit distance.

If the cylinder diameter is d (30mm) and the drop diameter is 2x, then:

$$(d-x)x = l^2$$

where 2l is the minimum transit distance, and is displayed in Table 1. From Table 1 for drops of relevant size falling at terminal velocity the maximum transit time is 26 msecs and the minimum is 1.6msecs. In the very high wind of $30ms^{-1}$ the pulse separation times range from 1msec down to only 140μsecs. If the axis of the instrument is not perpendicular to the wind then these times will be increased slightly.

(c) Probability of overlapping pulse pairs

The probability of finding two drops in the sample volume at one time can be found from Poisson statistics. If the concentration of raindrops is n and the sample volume is V, the the average probability of finding one drop in the beam is $\lambda = n V$. Poisson statistics then give the probability of finding m drops in the beam as:

$$f(m) = \frac{e^{-\lambda} \lambda^m}{m}$$

It is quite justifiable to assume that the drops are falling randomly. In this case the results are summarised in Table 2 for a sample volume of $120cm^3$ (cylinder diameter 3cm, length 17cm) and assuming a Marshall Palmer raindrop size distribution. It is well known that this distribution overestimates the concentration for small drops and we can see that at 10mm hr^{-1} the chance of finding two drops greater than 500μm in the beam at one time is only one in 200. In the initial design of the hardware and the software sorting programs it is proposed to ignore this probability.

5. Electronics and Circuit Diagrams

When drops enter and leave the sample volume there is a pulse on the output of the photodiode amplifier. We need to measure the size of this pulse and the elapsed time since the last pulse to enable the amplitude of pulse pairs and transit times of individual drops to be calculated. To enable this pulse data to be stored and then subsequently sorted into raindrop spectra a small Z80 based 'Nascom' microcomputer is used and the spectra output to a printer. The drops are measured and timed using a machine code program in real time, but the subsequent sorting is performed using a slow program in 'Basic'.

The overall electronics block diagram is shown in Figure 3 (a). The timing is achieved using the Zylog CTC chip, and as shown below, the ports 8, 9, 10 and 11 of the Z80 microprocessor are connected to various timers to enable the drop transit time to be found and also the real time in minutes and seconds to be read so that absolute concentrations can be calculated. The photodiode and pre-amplifier are housed with the distrometer up to 20m from the computer. Finally we consider the computer interface, which detects the peak value of pulses and signals to the computer via port 5 that it has an eight bit pulse height ready on port 4. We shall now consider these three sections in detail.

(a) The Counter Timer Board

There are two requirements for the timing of the distrometer. We need to measure the time between the pulse pairs caused by a single drop, entering and leaving the sample volume, which was shown in Section 4 to be in the range 1 to 24 msecs for conditions of reasonably low wind speed; and also we need to know the total sample time which will probably be of the order of minutes. Because of this two external clocks are needed at 4 khz and 1 hz.

The CTC board has four eight-bit counter timer registers, the mode of each counter timer being controlled by two control words. The configuration used is shown in Figure 4. A crystal oscillator at 2^{22}hz is divided down using 4040 counters to supply a 4.096khz clock for the pulse separation timing and a 1hz for a minutes and seconds counter. The 4khz clock is fed into channel 0 on the CTC board which counts quarter milliseconds and the channel 0 overflow is fed into channel 1. Thus channels 0 and 1 (corresponding to Ports 8 and 9) hold a sixteen bit time in quarter milliseconds. The 1hz clock is fed to channel 2, which resets after sixty counts, and triggers channel 3 on resetting, so channels 2 and 3 (Ports 10 and 11), hold the seconds and minutes counts. Figure 4 also shows the control words needed to set the Ports 8, 9, 10 and 11 to operate in this way.

(b) Pre-amplifier and line driver

The pre-amplifier electronics and power supply are housed in the same diecast box as the photodiode and the receiving optics, and are shown in Figure 5. The arrangement is capable of driving signals down cables at least 20m long to the computer with its interface electronics which are housed in some adjacent shelter.

The overall circuitry is reasonably straightforward, but there are some practical points which require discussion. We note that from Section 4(a) the pulse lengths should be in the range 10-500μsecs

The four IC's act as voltage to current converter, unity gain buffer, a.c. inverting amplifier, and analogue line driver. Two outputs are available, the output from the buffer monitors the overall light level incident upon the photodiode and is useful for verifying that the alignment is correct, while the pulses from the raindrops after further a.c. amplification are transmitted down the cable to the computer interface using a high-current high-slew-rate analogue driver.

The photodiode is a SD - 444 - 11 - 11 - 171. The 50mm^2 receiving area is most useful in alleviating any alignment problems but the capacitance of this area does mean that any subsequent amplifier is prone to oscillate. The first stage current to voltage converter uses a 3140 with 1.8MΩ and 5pf in the feedback, this gives a rise time of 9μsecs; any higher gain in this first stage leads to oscillation, as does a capacitative load for the 3140. As a consequence a unity gain 741 buffer is inserted before the capacitor of the a.c. amplifier and the capacitance of the 20m cable carrying the d.c. monitor level from this current to voltage converter.

Using a light source the 6V 10W miniature quartz-halogen source type M29 manufactured by Thorn Lighting U.K. mounted as described in Section 3 the monitor light level should be about 6V. The first 3140 amplifier saturates with an output of 11V and consequently some slowly varying extra diffuse ambient stray light is tolerable and will not affect the a.c. drop signal.

The gain of the a.c. amplifier should be adjusted here or in the attenuator of the interface receive electronics so that a 3.6mm diameter test drop gives a pulse of 3.6V. These drops can be simply produced by a slow flow of water through a hyperdermic needle.

(c) Interface electronics

The detailed circuit is shown in Figure 6 with the block diagram and timing sequence in Figure 3.

Considering the timing sequence we see that when the comparator resets, the peak detector will hold the maximum value of the pulse, and this resetting triggers a monostable which initiates an analogue to digital conversion of the value held by the peak detector. When the conversion is complete (about 20μsecs) the end of conversion (EOC) pulse fires a monostable which closes a switch thus discharging the peak detector capacitor and resetting it. The eight bit output of the A/D is connected to channel A (Port 4 in the program)

of the micro, whereas the end of convert output of the A/D is connected to the most significant bit (MSB) of channel B (Port 5 in the program). Thus as we shall see in the next section the program sits in an idling loop continuously monitoring the MSB of Port 5; on detection of an EOC pulse, it reads Port 4 which contains the pulse height information, and then reads Ports 8 and 9 which contain the time elapsed since the last pulse (see Section 5a). The computer then waits for another EOC pulse.

Within 30μsecs of detecting the end of one pulse the hardware is ready for another pulse. In Section 4 it was calculated that the minimum pulse separation even in $30ms^{-1}$ wind should be 140μsecs.

The 531 and the JFET together form a peak detector circuit. The 1000pF capacitor after the 531 is charged through the diode for positive going input signals only, the JFET acts as a simple follower to maintain high input impedance so that once charged the 1000pF discharges only very slowly.

The circuit shown in Figure 6 has two possible signal inputs. The signal from the line driver of the photodiode amplifier can be connected straight into the peak detector for real time analysis; or the signal from the tape recorded raindrop data acquired in Virginia can be amplified before it is routed to the peak detector. In noisy environments it may be necessary to use a differential amplifier to reject any noise picked up on both leads of the twisted pair from the distrometer, but this has not yet been found to be necessary. The eight L.E.D.'s display the latest value of the A/D converter and form a useful indication that drops are being detected.

6 Software For Z80 Based Microcomputer

In the present configuration of the microcomputer, the first 8k of memory are used for 'Basic' with a small amount of this space reserved for user written machine code subroutines. The memory from 8k to 20k, that is 12k eight bit words, is used for storing the data acquired by the subroutine in real time, it can be subsequently accessed by the basic program using the 'peek' statement.

a) Z80 Machine Code Subroutine

On receipt of a pulse from the distrometer we require to store its amplitude, the time since the last pulse in quarter millisecond units, and occasionally we require the absolute time to be recorded to enable the absolute value of the concentrations of drops to be calculated. As described previously the memory from 8k to 20k (2000 to 4FFF in hex) is available for this data. This memory has been split up into 256 byte 'pages', each page starts with a header comprising two zeros and then the absolute time in minutes and seconds read from the CTC (timer) board on the microcomputer. The data from each drop then fills the remaining 252 bytes on the page. Each pulse is recorded in the format : time in quarter milliseconds, quarter millisecond overflow, pulse height. Thus on the page we can store 252/3 = 84 pulses, or a maximum of 42 drops assuming there are no drops giving single pulses which will be rejected by the basic pulse sorting program. For 12K of memory, we have 48 'pages' or a possible total of 48x42=2016 raindrops.

The machine code subroutine which effects this data format is shown in Figure 7 The handshaking comprises the section of program here address 0C94 to 0CAD where the program idles until a transition from 1 to zero arrives on port 5 bit 7 (the end of convert pulse from the A/D), it

then stores the eight bit values of ports 8, 9 and 4 (16 bits of elapsed time in quarter milliseconds and port 4, the A/D value) in sequential memory locations using the HL register pair as a pointer for the memory address.

Turning now to the other steps in the program we see that if the HL register pair holds the pointer address for storing the data then as we increment HL whenever H changes we have just filled up one page of data. Register D holds the current value of HL and after incrementing HL we test to see if H≠D, if this is so a page has been filled. Two courses of action are now possible. C is initialised as the maximum value of H we want, so if H=C we have enough data and we return to the main program; otherwise we initialise a new page and wait for some new pulses.

Looking at the initialisation in detail. At the start HL is set to 2000 and then in this program C (=Hmax) is set to 34 for 16_{10} pages of data. C is usually set by 'poking' the value into location 0C84 in the main program. We now enter the loop to initialise a new page, and set D=H, and write 0,0, time in minutes (port 11) and in seconds (port 10), and enter the pulse handshaking loop. After detecting each pulse and writing three bytes into memory we check whether the page is full. If D=H we go and look for another pulse, but if D≠H we check whether the new H=C (our value of Hmax) in which case we return to the main program. If H≠C then we go and initialise a new page at 0C83. However to indicate to the operator that data is being gathered and reassure him that the computer really is filling its memory with data, before going to 0C83 we jump to a subroutine in the computer monitor (instruction DF 66) which simply transfers the contents of the HL register to the TV monitor. As each page is filled up, the address of each new page of data is displayed for the operator to see.

b Basic Program

The basic program developed for sorting the pulses acquired in the machine code subroutine into spectra and outputting the data on to a small printer is shown in Figure 8. It should be stressed that this program is not optimised and provides many output statements for monitoring the performance of the distrometer which would not be required for a non-prototype instrument.. The program outputs spectra calculated by the two independent methods so as to enable a comparison to be made. These methods are the 'flux' method with an assumed drop terminal velocity and the 'time of flight' method whereby no velocity information is required but the spectra are derived from knowing the fraction of the total time that a drop of a certain size is within the sample volume.

The program is fairly straightforward:

ℓ 15-70 set up the ports and call the m/c code subroutine

ℓ 90-150 zero various arrays used for storing and counting drops

ℓ 155-175 output the amplitudes and times of the pulses on the first page to the printer

ℓ 205- For each new page of data calculate the amplitudes and elapsed time between pulses, accept pulse pairs with time separation between 1 and 20msecs (ℓ330-332) and amplitudes agreeing to within 20% (ℓ 338). Increment the appropriate bin counter (ℓ367)

ℓ 500 output the spectra calculated by the time of flight and flux method for this one page.

ℓ 655 calculate the rainfall rate.

ℓ 678 Get a new page of data (at line 205).

ℓ 680 When all the pages of data analysed, print out the cumulative spectra and the equivalent Marshall Palmer spectrum.

7. Setting up, Calibration and Results

The disdrometer is designed to be simple to use and not to require any elaborate alignment procedure. Providing the frame on which the collimating and receiving optics are mounted is reasonably rigid the instrument should only need aligning once. The photodiode may be moved in a vertical plane as shown in the engineering drawings, and its position should be adjusted until the light intensity as measured by the DC monitor level output (Section 5b) is a maximum. This value should be about 6V. At this stage all the light of the annulus should be focussed on to the photodiode. A further simple check is to use drops produced by a slow flow of water through a hyperdermic needle to check that the pulse pairs are of equal size and do not vary with position around the annulus, or along the beam. As mentioned in Section 5b, the gain of the preamplifier (or more conveniently the attentuation between the preamplifier and the interface electronics) should be adjusted so that a 3.6 mm drop produces a 3.6V pulse. This can be verified either using the LED display of the interface electronics or by running the program and checking that all the pulses are sorted in the correct bin. Once set up the disdrometer should not go out of alignment but the above test using 3.6 mm drops should always be used as a check.

b) Results

Figures 9 and 10 display some spectra obtained in Virginia, USA and Manchester, UK. We can see in Figure 9 that there is reasonable agreement between the spectra calculated for the 88 second period by the conventional droplet flux method and the novel time of flight criterion unique to this disdrometer. The counts displayed in bin 1 (200-400um radius) may be unreliable. Both spectra show less small drops than the equivalent Marshall Palmer. To calculate the significance of these spectra the second column labelled "cumulative number" in the Table gives the total number of drops (n) recorded

in each bin. From Poisson statistics the fractional error in the concentration for that bin is $1/\sqrt{n}$. Consequently, we can see that although the spectra calculated by the two methods agree for the larger drops, the flux method is recording more drops in bins 2, 3 and 4. This is to be expected as there was a light wind of a few metres a second which would increase the apparent flux of smaller drops more than the larger ones. The time of flight method is of course unaffected by any wind.

The spectra shown in figure 10 was taken in very light drizzle. Again the wind speed was a few metres a second and we see that far more small droplets are recorded using the flux method than the time of flight principle. However, even the time of flight method is recording more drops than predicted by the Marshall Palmer for the equivalent rainfall rate. Although the statistics in bin 3 (total drop count 9, error 33%) are not good, it may well be that the often quoted statement that the Marshall Palmer overestimates the number of small droplets may not be true for the fine light drizzle so prevalent in the United Kingdom.

8 Future Work

The final Figure 11 shows a photograph of the disdrometer on a dexion framework for field operation. Versions developed during the past twelve months were rather larger using collimating lenses of focal length 1m and then 50cm, rather than the 25cm lens used in the version in this photograph and in the engineering drawings. It would be difficult to reduce the size further. As has been described in this report the optical set-up, the electronics and the software have been developed and are working satisfactorily. Results show that the new method of calculating raindrop concentrations using the time of flight of the drops across the sample volume works well. In windy conditions the conventional flux method overestimates the concentration of drops. It is worth noting that a method which relies on measuring the flux across a horizontal surface, such as the Knollenberg probe, will have problems due to the gusty nature of the wind. The small drops in windy conditions do not fall at a constant angle but are, on occasion even observed rising upwards.

More work and specifically more experience of using the present disdrometer in many different types of naturally occuring rainfall are needed before the instrument can be deemed truly operational.

Some of the remaining tasks are listed below.

a) Field trials comparing the rainfall rate with a tipping bucket raingauge and if possible another disdrometer.

b) Operation in high wind speeds. A comparison of the two methods of calculating the raindrop spectra whilst measuring the windspeed. An examination of the statistics of the transit times of the drops within a certain bin size to see if they agree with theory, and are modified by the ambient wind as predicted.

c) Drops landing on the lenses. The problem of drops landing on the lenses in the vicinity of the annular mask is not as severe as with scattering instruments. The direct transmission of light through a drop on the lens is not greatly attenuated. However, in Virginia a rather primitive heater and blower were installed to keep the lenses warm. This arrangement worked well but the wind speeds were never excessive.

If we observe that the light to be collected by the lenses is only in a ring 100μm wide but that the raindrops hitting the lens will have had trajectories at various angles, it is obvious that a serrated shield of multiple discs rather like a high voltage insulator mounted on the centre of the lens will allow the parallel annular beam of light to fall on the lens, but make it virtually impossible for the raindrops and any splash products to hit the lenses. Also any arrangements for blowing air onto the lenses need be less powerful because the lenses themselves will be less well ventilated by the ambient saturated air.

d) Splashing. In heavy rain the disdrometer will also measure splash products passing through the beam. Both ground-based commerical instruments suffer from this problem. However, the device (as shown in the photograph) can be mounted some distance above the ground to stop drops bouncing from the ground. Sponge shields are placed on the upper surface of the transmitting and receiving optics (not shown in the figure) and in the light rains so far encountered they have worked well. One can envisage two disdrometers at right angles but with intersecting sample volumes; by accepting only drops observed by both instruments, the drops in this intersecting volume are measured, and are supposedly far from the solid supports and therefore with no splash products. However, an examination of the statistics and especially the pulse arrival rate shows that this is not a very practical method.

e) Two sample volumes. The present device with a sample volume 17cm long and 3cm across is a compromise between the diffraction limit for small drops and the need to measure a significant number of the rarer large drops.

However, to attain a meaningful sample of all sizes of drops rapidly, two versions could be run together, a small sample volume for the small drops and a bigger one (up to 1m 50cm long) for the drops larger than 1mm diameter.

f) The present disdrometer is portable but requires considerable ancillary equipment consisting of the computer and keyboard, TV monitor and printer. A more ideal solution would be to burn the debugged and finalised program on to an EPROM and output the data on to a digital mini-cassette. The electronics would then all fit in the present box containing the computer interface.

g) Lower power version. Most of the power consumed by the device is in the illumination (12W). For remote sites a low power version could be developed. Firstly, less illumination could be used but more amplification in the electronics. Secondly, a tipping bucket rain-gauge could be used to switch the light on during rain.

REFERENCES

Curry M J & Schemenauer R S 1979 J Appl Met, 18, 816-821

"The small-particle response of an optical array precipitation probe"

Heymsfield A J 1976 Atmos Tech, No 8, 17-24

"Particle size distribution measurement: An evaluation of the Knollenberg optical array probes"

Joss J & Waldvogel A 1967 Pure & Appl Geophys, 68, 161-67

"Ein spektrograph für Niederschlagstropfen mit automatischer Auswertung"

Knollenberg R G 1970 J Appl Met, 9, 86-103

"The optical array: an alternative to extinction and scattering for particle size measurements"

1972 J Appl Met, 11, 501-508

"Comparative liquid water content measurements of conventional instruments with an optical array spectrometer"

Marshall J S & Palmer W McK 1948 J Met, 5, 165-166

"The distribution of raindrops with size"

FIGURES

1. The present disdrometer

2. Minimum Pulse Separation

3a. Electronics Block Diagram

b. Timing Diagram

4. External Electronics for the Counter Board

5. Pre-amplifier and Line Driver

6. Computer interface electronics

7. Z80 Machine Code Subroutine

8. Basic Program

9. Raindrop Spectrum in Virginia

10. Raindrop Spectrum in Manchester

11. Photograph of the disdrometer

FIGURE 1: The present disdrometer

a) Optical set-up.

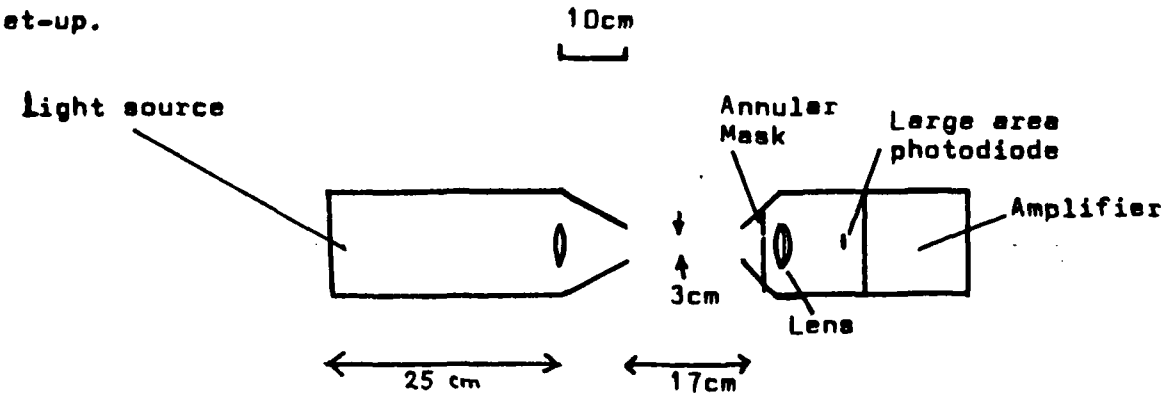

b) Edge effect rejection

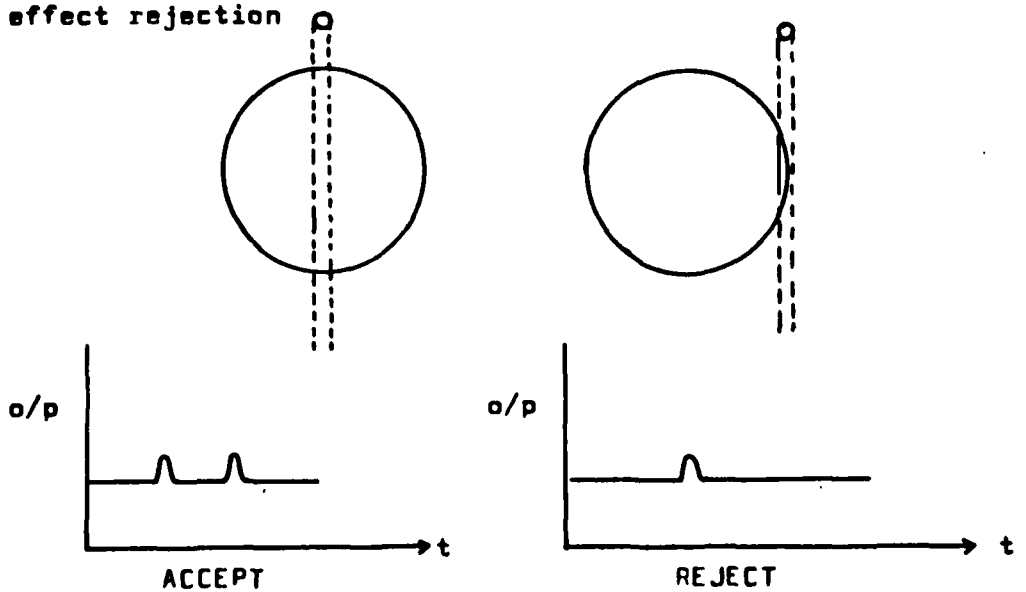

TABLE 1

Minimum and Maximum Pulse Separation Times

DROP DIAMETER	MIN. TRANSIT DISTANCE (mm)	TERMINAL VELOCITY			30 ms^{-1} WIND	
		v ms^{-1}	MIN msecs	MAX msecs	MIN msecs	MAX msecs
300μm	4.2	1.15	3.6	26	0.14	1
500μm	5.5	2	2.7	15	0.18	1
1 mm	7.5	4	1.9	7.5	0.25	1
2 mm	11	6.5	1.7	4.6	0.36	1
3 mm	13	8.0	1.6	3.8	0.43	1
4 mm	15	8.8	1.7	3.4	0.5	1

The maximum transit distance is always 30 mm

FIGURE 2

Minimum Pulse Separation

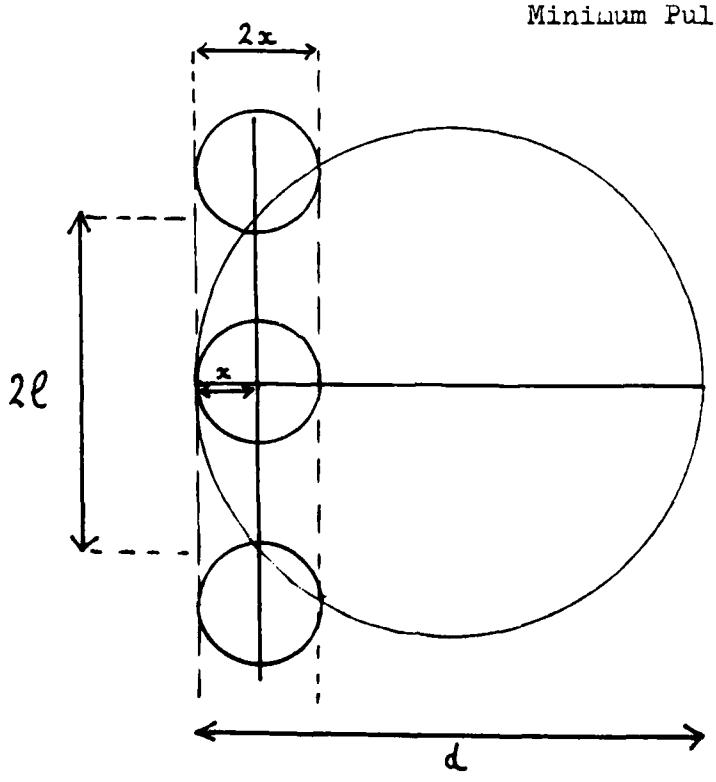

TABLE 2

Probability of one drop (f(1)) and two drops (f(2)) in the sample volume ($0.12\ 10^{-3}\ m^3$) assuming a Marshall Palmer raindrop distribution

RAINFALL RATE	DROPS > 500μm			DROPS > 300μm		
mm hr^{-1}	n (m^{-3})	f(1)	f(2)	n (m^{-3})	f(1)	f(2)
1	230	.02	.0002	540	.06	.002
3	450	.05	.001	900	.1	.005
10	850	.1	.005	1400	.17	.015

FIGURE 3

a) Electronics Block Diagram

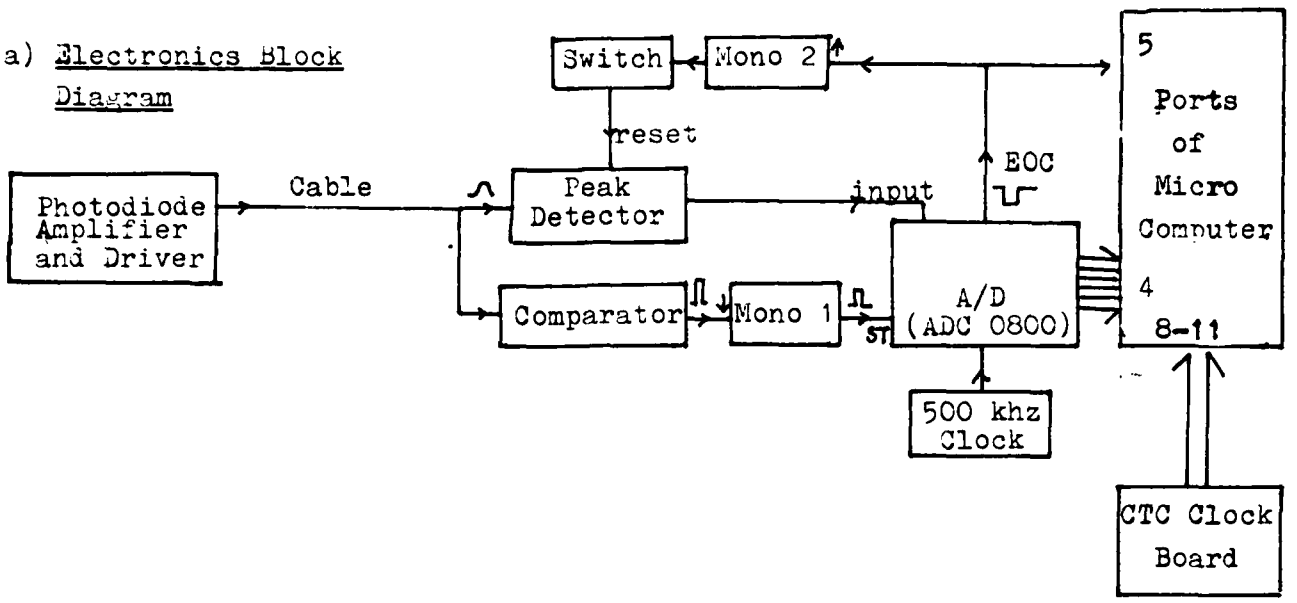

b) Timing Diagram

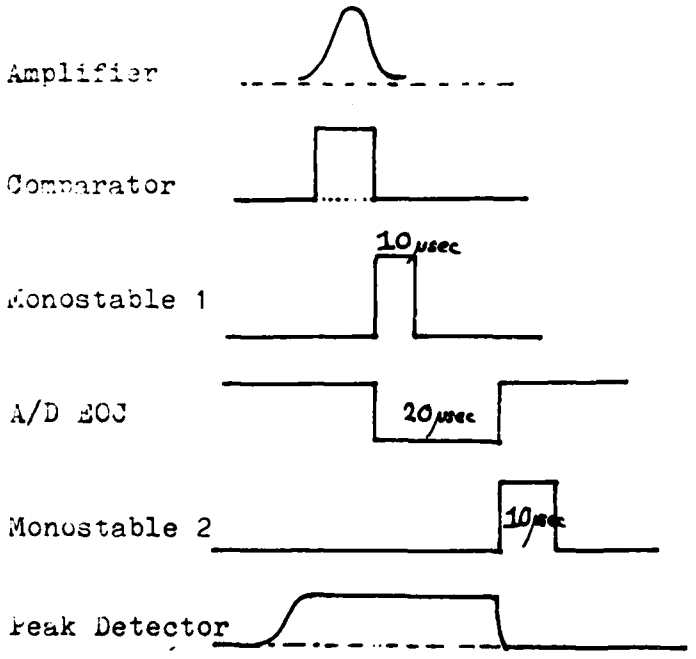

FIGURE 4

External electronics for the timer counter board.

Timer Board configuration

(PORT 8)	ch0	– INPUT 4 khz ,	time const 255	reset every $255 \times \frac{1}{4}$ msec	= 64 msec.
(PORT 9)	ch1	– INPUT ch0 ,	time const 255	reset every $255 \times \frac{1}{16}$ msec = 16 secs	
(PORT 10)	ch2	INPUT 1 hz ,	time const 60	reset every MINUTE	
(PORT 11)	ch3	INPUT ch3 ,	time const 60	reset every hour.	

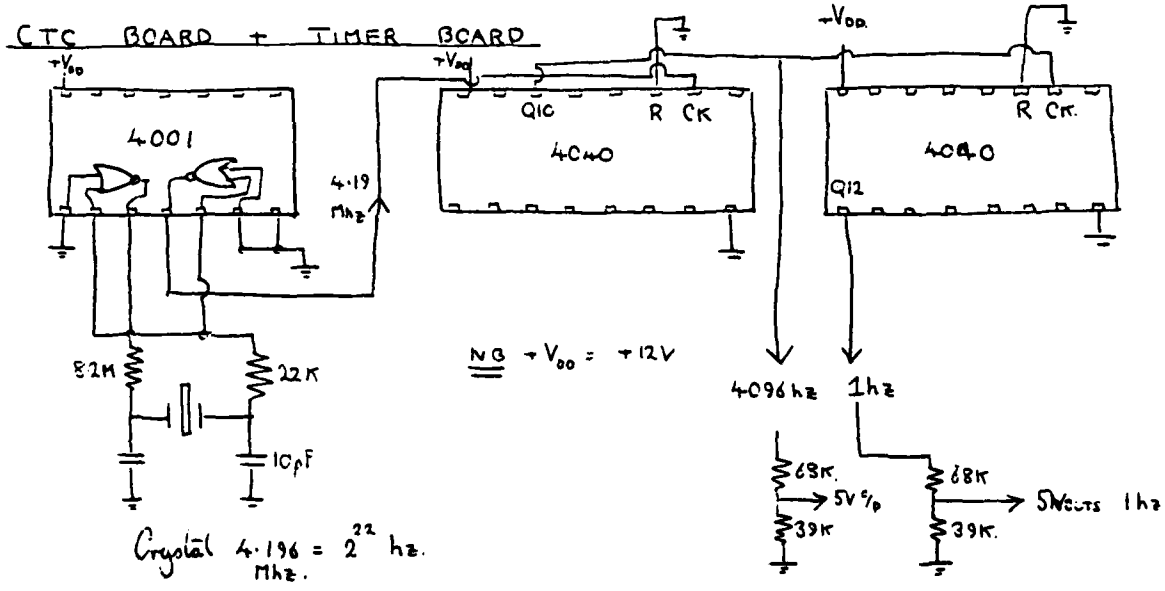

CTC BOARD SOCKET	FUNCTION	PIN		FUNCTION	PIN
	0 TRIG	10 ← 4.096hz IN		2 TRIG	12 ← 1hz IN.
	0 o/p	7	LINK	2 o/p	5 LINK.
	1 TRIG	11		3 TRIG	13
	1 o/p	8			

BASIC PORT SETTING ~ all ports in counter mode.

```
10   OUT 8, 117 : OUT 8, 255 : OUT 9, 117 : OUT 9, 255
20   OUT 10, 117 : OUT 10, 60 : OUT 11, 117 : OUT 11, 60
```

FIGURE 5 PRE-AMPLIFIER AND LINE DRIVER

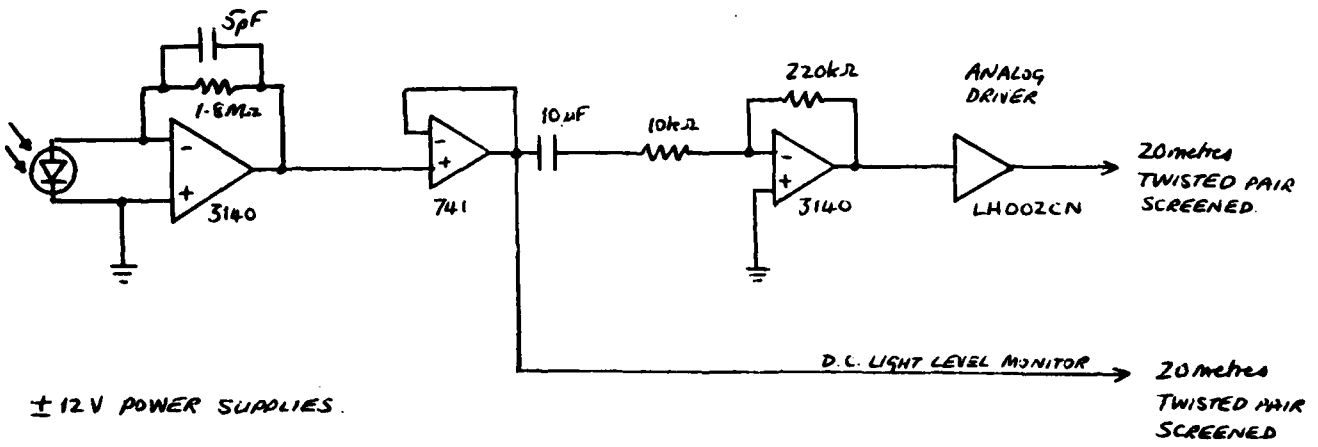

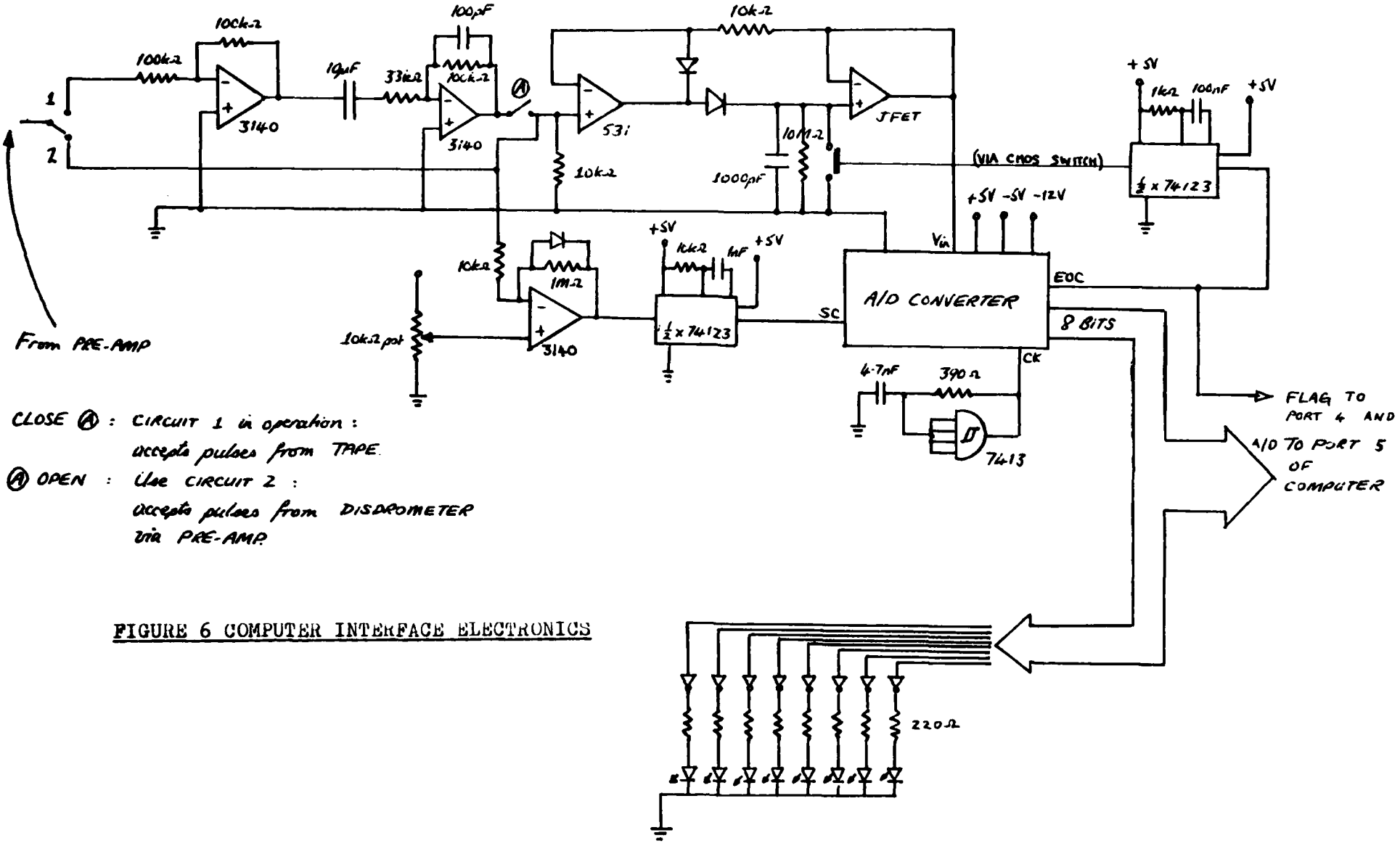

CLOSE Ⓐ : CIRCUIT 1 in operation :
accepts pulses from TAPE

Ⓐ OPEN : Use CIRCUIT 2 :
accepts pulses from DISDROMETER
via PRE-AMP

FIGURE 6 COMPUTER INTERFACE ELECTRONICS

FIGURE 7: Z80 MACHINE CODE SUBROUTINE

ADDRESS	CONTENTS		
0C80	21	LD HL # 2000	Initialise constants (C poked down from main program)
0C81	00		
0C82	20		
0C83	0E	LD C # 34	
0C84	34		
0C85	54	LD D, H	
0C86	3E	LD A, # 0	Initialise 'page' of memory with 0,0, time in minutes (ch11=0B), and seconds (ch10=0A)
0C87	00		
0C88	77	(HL) ← A	
0C89	23	INC HL	
0C8A	77	(HL) ← A	
0C8B	23	INC HL	
0C8C	DB	IN A, 0B	
0C8D	0B		
0C8E	77	(HL) ← A	
0C8F	23	INC HL	
0C90	DB	IN A, 0A	
0C91	0A		
0C92	77	(HL) ← A	
0C93	23	INC HL	
0C94	DB	IN A, 5	Wait here until MSB port 5 = 1
0C95	05		
0C96	CB	BIT 7, A	
0C97	7F		
0C98	CA	JP Z 0C94	
0C99	94		
0C9A	0C		
0C9B	DB	IN A, 5	Wait here until MSB port 5 = 0
0C9C	05		
0C9D	CB	BIT 7, A	
0C9E	7F		
0C9F	C2	JP NZ 0C9B	
0CA0	9B		
0CA1	0C		
0CA2	DB	IN A, 8	i.e. exit on negative edge on MSB
0CA3	08		
0CA4	77	(HL) ← A	Store channels 8,9, and 4 in sequential memory locations. The HL pointer is incremented after each port is read.
0CA5	23	INC HL	
0CA6	DB	IN A, 9	
0CA7	09		
0CA8	77	(HL) ← A	
0CA9	23	INC HL	
0CAA	DB	IN A, 4	
0CAB	04		
0CAC	77	(HL) ← A	
0CAD	23	INC HL	
0CAE	7A	LD A, D	If D = H, page is not full go and wait for more pulses
0CAF	BC	CP A, H.	
0CB0	CA	JP Z 0C94	
0CB1	94		
0CB2	0C		
0CB3	79	LD A, C	If C ($=H_{max}$) = H, enough data return to the main program
0CB4	BC	CP A, H	
0CB5	C8	RETURN IF Z	
0CB6	DF	JMP SUB: SCREEN←(HL)	Page full. Output (HL) on to monitor, then go and initialise and fill another page
0CB7	66		
0CB8	C3	JP 0C83	
0CB9	83		
0CBA	0C		
0CBB	C9	RETURN	
0CBC	C9		
0CBD	C9		

FIGURE 8 a BASIC PROGRAM

```
15 OUT8,117:OUT8,255:OUT9,117:OUT9,255
20 OUT10,117:OUT10,60:OUT11,117:OUT11,60
25 OUT6,255:OUT6,255:OUT7,255:OUT7,255
26 INPUT"NUMBER OF PAGES";Y:Z=Y+64
27 INPUT"NUMBER OF BINS";N:PRINT
50 IF(Z>80)GOTO26
70 POKE3204,Z:DOKE4100,3200:A=USR(0)
80 B=INP(11):C=INP(10):A=16384+(256*(Z-64))
90 POKE A,0:POKE A+1,0:POKE A+2,B:POKE A+3,C
96 DIM DD(N),FF(N),D(N),F(N),R(N),S(N)
97 DIM RAD(N),GF(N),VEL(N)
98 DIM X1(N),X2(N),NUM(N),E(N),R1(N),R2(N)
100 FORK=1TON:E(K)=0:DD(K)=0:FF(K)=0:NEXTK
150 WIDTH90:POKE4163,(INT(90/14)-1)*14
155 I=1:A=16388
160 B=PEEK(A):C=PEEK(A+1):VV=128-PEEK(A+2)
165 A=A+3:I=I+1:IF(I>84)THEN PRINT:GOTO200
170 T=0.25*((BB-B)+256*(CC-C))
175 BB=B:CC=C:PRINTT;VV,:GOTO160
200 AVR=0
205 FORM=1TOY:SUM=0:SSU=0
222 FORK=1TON:RAD(K)=((100*K)+50)*0.001
224 GF(K)=(((RAD(K)↑3)*1.33*3.1416)/2.9)↑0.382
226 VEL(K)=9.32032*(1-(1/(EXP(GF(K)))))
310 D(K)=0:F(K)=0:NEXTK:I=1
314 A=16388+256*(M-1):OM=PEEK(A-2):OS=PEEK(A-1)
317 BB=PEEK(A):CC=PEEK(A+1):VV=128-PEEK(A+2)
320 A=A+3:I=I+1:IF(I>84)GOTO410
323 B=PEEK(A):C=PEEK(A+1):V=128-PEEK(A+2):A=A+3
326 I=I+1:IF(I>84)GOTO410
328 T=0.25*((BB-B)+256*(CC-C))
330 IF(T<1)GOTO400
332 IF(T>20)GOTO400
334 VW=V+VV:R=V:IF(VV>V)THENR=VV
338 IF(ABS(V-VV)>.9*R)GOTO350
340 K=INT(0.005*VW*N)
342 E(K)=E(K)+1:D(K)=D(K)+1:F(K)=F(K)+T:GOTO317
350 NB=PEEK(A):NC=PEEK(A+1):NV=128-PEEK(A+2)
352 A=A+3:I=I+1:IF(I>84)GOTO410
355 T=0.25*((BB-NB)+256*(CC-NC))
360 IF(T<1)GOTO380
362 IF(T>20)GOTO380
363 R=NV:IF(VV>NV)THENR=VV
364 IF(ABS(NV-VV)>.9*R)GOTO380
365 VW=VV+NV:K=INT(0.005*VW*N)
367 E(K)=E(K)+1:D(K)=D(K)+1:F(K)=F(K)+T:GOTO400
380 BB=B:CC=C:VV=V:B=NB:C=NC:V=NV:GOTO328
400 BB=B:CC=C:VV=V:GOTO323
410 NM=PEEK(A+2):NS=PEEK(A+3)
420 IF(OM<NM)THENNM=NM-60
425 GOTO432
430 PRINT: PRINT"PAGE" M
432 TT=(OM-NM)*60+(OS-NS)
435 PRINT"FROM"OM"MINS";OS"SECS ";
440 PRINT"TO"NM"MINS";NS"SECS.";
445 PRINT"TIME LAPSE:"TT"SECS":PRINT
448 IF(M<Y)GOTO480
450 PRINT "      RADIUS        No.   CUM.No.";
460 PRINT"  TIME(ms)    CONC'N./m↑3 ";
470 PRINT"          CUM.SPECTRUM"
473 PRINT SPC(38)"    FLUX    T.OF.F";
475 PRINT SPC(7)"FLUX     T.OF.F"
```

INITIALISE PORTS

SET UP MAX NO PAGES

CALL SUBROUTINE.

TERMINATE TIME ON RETURN

ZERO ARRAYS

CALCULATE AND OUTPUT VOLTS AND ELAPSED TIME FOR FIRST PASE OF DATA.

FOR EACH PAGE (M)

CALCULATE TERMINAL VELOCITIES

FOR EACH PULSE PAIR. CALCULATE AMPLITUDE AND ELAPSED TIME. ACCEPT TIMES 1-20 msec AND PAIRS AGREEING TO WITHIN 20% K IS BIN NUMBER. INCREMENT BIN COUNTS

LOOK FOR OVERLAPPING PULSE PAIRS.

WRITE TITLE FOR SPECTRUM

FIGURE 8 b BASIC PROGRAM (cont)

```
480 WIDTH90:POKE4163,(INT(90/14)-1)*14
500 FORK=1TON:R(K)=D(K)*200*17/(23*TT*VEL(K))
501 R(K)=(INT(R(K)*100))/100
502 S(K)=F(K)*17/(23*0.12*TT)
503 S(K)=(INT(S(K)*100))/100
504 DD(K)=DD(K)+R(K):FF(K)=FF(K)+S(K)
506 R1(K)=INT(2000*K/N):R2(K)=INT(2000*(K+1)/N)
507 X1(K)=R(K)*VEL(K)*RAD(K)↑3*36/1E4
508 SUM=SUM+X1(K)
510 X2(K)=S(K)*((2*RAD(K))↑3)*VEL(K)
511 SSU=SSU+X2(K):NEXTK
515 IF(M<Y)GOTO655
531 FORK=1TON:PRINTK;TAB(4);
532 P$=STR$(R2(K))
534 P$=RIGHT$(P$,(LEN(P$)-1))
535 J$=STR$(R1(K))+"-"+P$+"um"
536 PRINTJ$;TAB(17);
545 PRINTD(K);TAB(23);E(K);TAB(31);
547 PRINTF(K);TAB(41);
550 PRINTR(K);TAB(51);S(K);TAB(61);
560 PRINT(INT(DD(K)/M*100))/100;TAB(71);
570 PRINT(INT(FF(K)/M*100))/100:NEXTK:PRINT
583 PRINT"SPECTRUM FOR PAGE:"M
590 FORK=1TON:PRINTK;TAB(4);
591 PRINT(INT(R(K)));TAB(9);
592 IFR(K)=0THEN PRINT:GOTO600
593 FORL=1TO(10*LOG(R(K)))
595 PRINTCHR$(42);:NEXTL:PRINT
600 NEXTK
655 PR=(INT((SUM*1.33*3.14159)*100))/100
660 RT=(INT((SSU*(6*3.14159)*1E-4)*100))/100
667 AVR=AVR+PR:PRINT:GOTO678
670 PRINT"R/RATE (by FLUX method):"PR;"mm/hr"
675 PRINT"R/RATE (by TIME OF FLIGHT method):";
677 PRINTRT;"mm/hr": PRINT
678 NEXTM
679 PRINT"CUMULATIVE SPECTRUM(I)"
680 FORK=1TON:PRINTK;TAB(4);
682 PRINT(INT(DD(K)/(M-1)));TAB(9);
684 IFDD(K)/(M-1)=0THEN PRINT:GOTO690
686 FORP=1TO(10*LOG(DD(K)/(M-1)))
688 PRINTCHR$(42);:NEXTP:PRINT
690 NEXTK:PRINT
693 PRINT"CUMULATIVE SPECTRUM(II)"
694 FORK=1TON:PRINTK;TAB(4);
695 PRINT(INT(FF(K)/(M-1)));TAB(9);
696 IFFF(K)/(M-1)=0THEN PRINT:GOTO699
697 FORP=1TO(10*LOG(FF(K)/(M-1)))
698 PRINTCHR$(42);:NEXTP:PRINT
699 NEXTK
700 N0=8000:RR=AVR/Y:BIN=0.2:CN=-0.21:PRINT
702 PRINT"AVERAGE R/RATE:"INT(RR*100)/100;
703 PRINT"mm/hr"
705 PRINT:P1=RR↑CN:P2=P1*4.1
715 FORK=1TON:P3=P2*(RAD(K)*2)
720 NUM(K)=INT((N0*EXP(-P3))*BIN):NEXTK
730 PRINT"EQUIVALENT M-P SPECTRUM"
770 FORK=1TON:PRINTK;TAB(4);
775 PRINTNUM(K);TAB(9);
778 IFNUM(K)=0THENPRINT:GOTO790
780 FORP=1TO(10*LOG(NUM(K))):PRINTCHR$(42);
785 NEXTP:PRINT
790 NEXTK
Ok
```

FOR EACH PAGE OF DATA CALCULATE SPECTRUM USING FLUX AND TIME OF FLIGHT METHOD.

OUTPUT SPECTRUM OF PAGE OF DATA.

CALCULATE RAINFALL RATES

NEXT PAGE.

OUTPUT CUMULATIVE SPECTRA FOUND USING FLUX AND TIME OF FLIGHT METHOD.

OUTPUT EQUIVALENT MARSHALL - PALMER SPECTRUM.

FIGURE 9 RAINDROP SPECTRUM IN VIRGINIA. TOTAL SAMPLE 88 SECONDS

	RADIUS	No.	CUM.No.	TIME(ms)	CONC'N./m↑3 FLUX	CONC'N./m↑3 T.OF.F	CUM.SPECTRUM FLUX	CUM.SPECTRUM T.OF.F
1	200-400um	2	26	17.75	43.14	18.22	38.42	14.67
2	400-600um	5	146	48.25	63.16	49.53	135.41	87.11
3	600-800um	12	136	71.75	108.65	73.65	87.05	61.81
4	800-1000um	6	99	22.75	42.98	23.35	51.21	38.17
5	1000-1200um	5	60	26.5	30.05	27.2	25.46	21.58
6	1200-1400um	2	26	8.25	10.48	8.46	9.72	7.22
7	1400-1600um	0	6	0	0	0	1.77	1.5
8	1600-1800um	0	2	0	0	0	.85	.84
9	1800-2000um	1	2	4.25	3.99	4.36	.44	.59
10	2000-2200um	0	0	0	0	0	0	0

SPECTRUM FOR PAGE: 15 (last 6 seconds of sample period)

```
1   43  ************************************
2   63  ****************************************
3   108 ********************************************
4   42  ************************************
5   30  **********************************
6   10  **********************
7   0
8   0
9   3   *************
10  0
```

(units are concentration in number per cubic metre)

CUMULATIVE SPECTRUM(I)

```
1   38  ***********************************
2   135 ***********************************************
3   87  ******************************************
4   51  ***************************************
5   25  ********************************
6   9   *********************
7   1   *****
8   0   *
9   0   *
10  0
```

Flux method: Spectrum for 88 second sample

CUMULATIVE SPECTRUM(II)

```
1   14  *************************
2   87  ******************************************
3   61  ****************************************
4   38  ************************************
5   21  ******************************
6   7   *******************
7   1   ****
8   0   *
9   0   *
10  0
```

Time of flight method, spectrum for same sample period

AVERAGE R/RATE: 1.04 mm/hr

EQUIVALENT M-P SPECTRUM

```
1   472 ************************************************************
2   209 ***************************************************
3   93  ********************************************
4   41  ************************************
5   18  ****************************
6   8   *******************
7   3   **********
8   1   *
9   0
10  0
Ok
```

FIGURE 10 RAINDROP SPECTRUM IN MANCHESTER TOTAL SAMPLE 45 SECONDS

	RADIUS	No.	CUM.No.	TIME(ms)	CONC'N./m↑3 FLUX	T.OF.F	CUM.SPECTRUM FLUX	T.OF.F
1	200-400um	7	118	75	226.49	115.48	343.78	151.
2	400-600um	12	105	91.75	227.4	141.28	167.28	103.
3	600-800um	0	9	0	0	0	10.22	6.62
4	800-1000um	0	3	0	0	0	3.58	4.23
5	1000-1200um	0	0	0	0	0	0	0
6	1200-1400um	0	0	0	0	0	0	0
7	1400-1600um	0	0	0	0	0	0	0
8	1600-1800um	0	0	0	0	0	0	0
9	1800-2000um	0	0	0	0	0	0	0
10	2000-2200um	0	0	0	0	0	0	0

SPECTRUM FOR PAGE: 12

```
 1   226 ********************************************************
 2   227 ********************************************************
 3   0
 4   0
 5   0
 6   0
 7   0
 8   0
 9   0
 10  0
```

(last 4 seconds of sample period)

R/RATE (by FLUX method): .11 mm/hr
R/RATE (by TIME OF FLIGHT method): .07 mm/hr

CUMULATIVE SPECTRUM

```
 1   343 ************************************************************
 2   167 ***********************************************************
 3   10  ************************
 4   3   ************
 5   0
 6   0
 7   0
 8   0
 9   0
 10  0
```

Flux method: spectrum for 45 second period.
(time of flight spectrum is given in the last column of the table above)

AVERAGE R/RATE: .12 mm/hr

EQUIVALENT M-P SPECTRUM

```
 1   239 ********************************************************
 2   67  ****************************************
 3   18  ****************************
 4   5   ***************
 5   1   *
 6   0
 7   0
 8   0
```

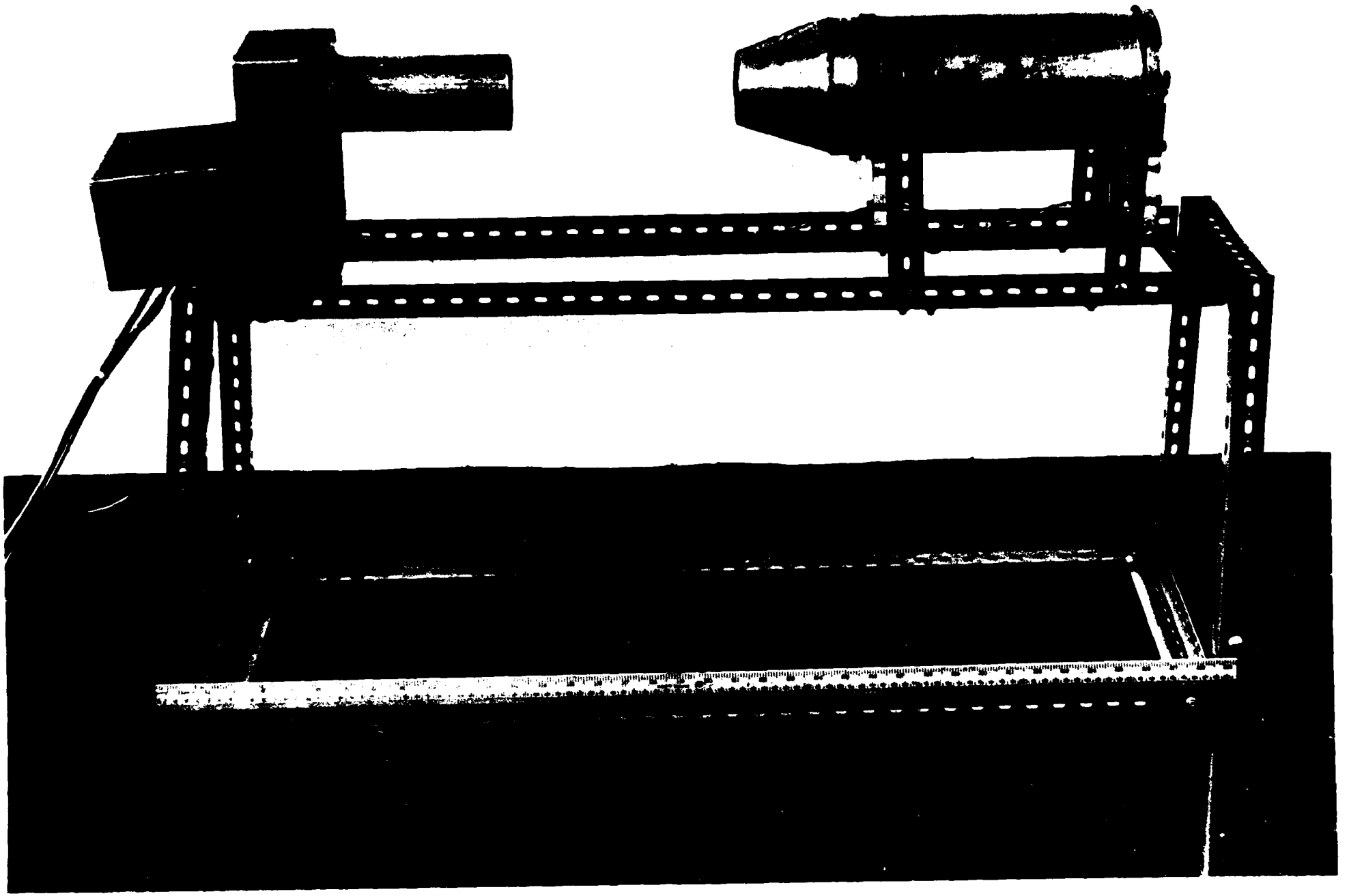

END

DATE
FILMED

9 - 81

DTIC